CURRENT 2020-718
8/31/2020

fresh. ARCHITECTURE

# INDEPENDENCE HARLEY-DAVIDSON

**9205 EAST INDEPENDENCE BLVD, MATHEWS, NC, 28105**

## PROJECT DIRECTORY


**OWNER**
INDEPENDENCE
HARLEY–DAVIDSON
9205 EAST INDEPENDENCE BLVD
CHARLOTTE, NC

**DESIGNER**
FRESH DESIGN INTERNATIONAL
3590 NW 54th St. Suite 7
Fort Lauderdale, FL, 33309
PH: (754) 200–5903
e–mail: andres@freshdesigninternational.com

**ARCHITECT**
FRESH ARCHITECTURE
AA. 26003544
1803 BANKS RD.
MARGATE, FL, 33063
PH: (754) 804–9077 x 703
CEL: (561) 213–7611
e–mail: ocabeza@fresh.international

**STRUCTURAL ENGINEER**
LOWE STRUCTURES,
INC 11651 CENTRAL PARKWAY, SUITE 106
JACKSONVILLE, FL, 32224
PH: (904) 992–0377
e–mail: mlowe@lowestructures.com

**MEP ENGINEER**
WAVE ENGINEERING
1300 S. MINT ST., SUITE 110
CHARLOTTE, NC, 28203
PH:(980) 256–7728
e–mail: asoler@wave–engineering.com


## DRAWING INDEX


| | | REZONING 08.28.20 |
|---|---|---|
| G.000 | COVER & INDEX | ■ |
| G.200 | EXTERIOR RENDERS | ■ |
| G.300 | REZONING SITE PLAN | ■ |
| G.302 | ARCHITECTURAL SITE DETAILS | ■ |
| G.304 | SOUND STAGE DETAILS | ■ |
| G.305 | SOUND STAGE DETAILS | ■ |
| **ARCHITECTURAL** | | |
| A.410 | EXTERIOR ELEVATIONS | ■ |
| A.600 | SIGN DETAILS | ■ |


Harley-Davidson

CURRENT 2020-718
8/31/2020

EXTERIOR RENDER
SCALE: NTS

EXISTING FACADE
SCALE: NTS

CODE IN EFFECT: 2018 NCBC

fresh.
ARCHITECTURE

1803 BANKS RD
MARGATE, FL, 33063
Tel. 754 804-9077
Tel. 561 213-7611
E-mail: oscar@fresh.international
www.freshdesigninternational.com

Architect

NOT VALID UNLESS IT BEARS AN ORIGINAL SIGNATURE AND A RAISED EMBOSSED SEAL

REGISTERED ARCHITECT
OSCAR J. CABEZA
14074
STATE OF NORTH CAROLINA

OSCAR CABEZA
ARCHITECT
No. ARC00405768

ARCHITECT OF RECORD HEREBY EXPRESSLY RESERVES HIS COMMON LAW COPYRIGHT AND OTHER PROPERTY RIGHTS IN THESE PLANS. THE DESIGN AND DRAWINGS ARE NEITHER TO BE REPRODUCED, COPIED NOR CHANGED IN ANY FORM OR MANNER WHAT SO EVER NOR ASSIGNED TO ANY PARTY WITHOUT FIRST OBTAINING THE EXPRESS WRITTEN PERMISSION AND CONSENT OF FRESH ARCHITECTURE.

CLIENT

INDEPENDENCE
HARLEY-DAVIDSON
CHARLOTTE, NC

**HARLEY DAVIDSON**
**9205 E. INDEPENDENCE BLVD,**
**MATHEWS, NC, 28105**

CONSULTING ENGINEER

PROJECT NUMBER
19 - 1711

ISSUES

| DATE | |
|---|---|
| 08.28.20 | REZONING APP |

CONTENT

EXTERIOR RENDERS

G.200

CURRENT 2020-718
8/31/2020

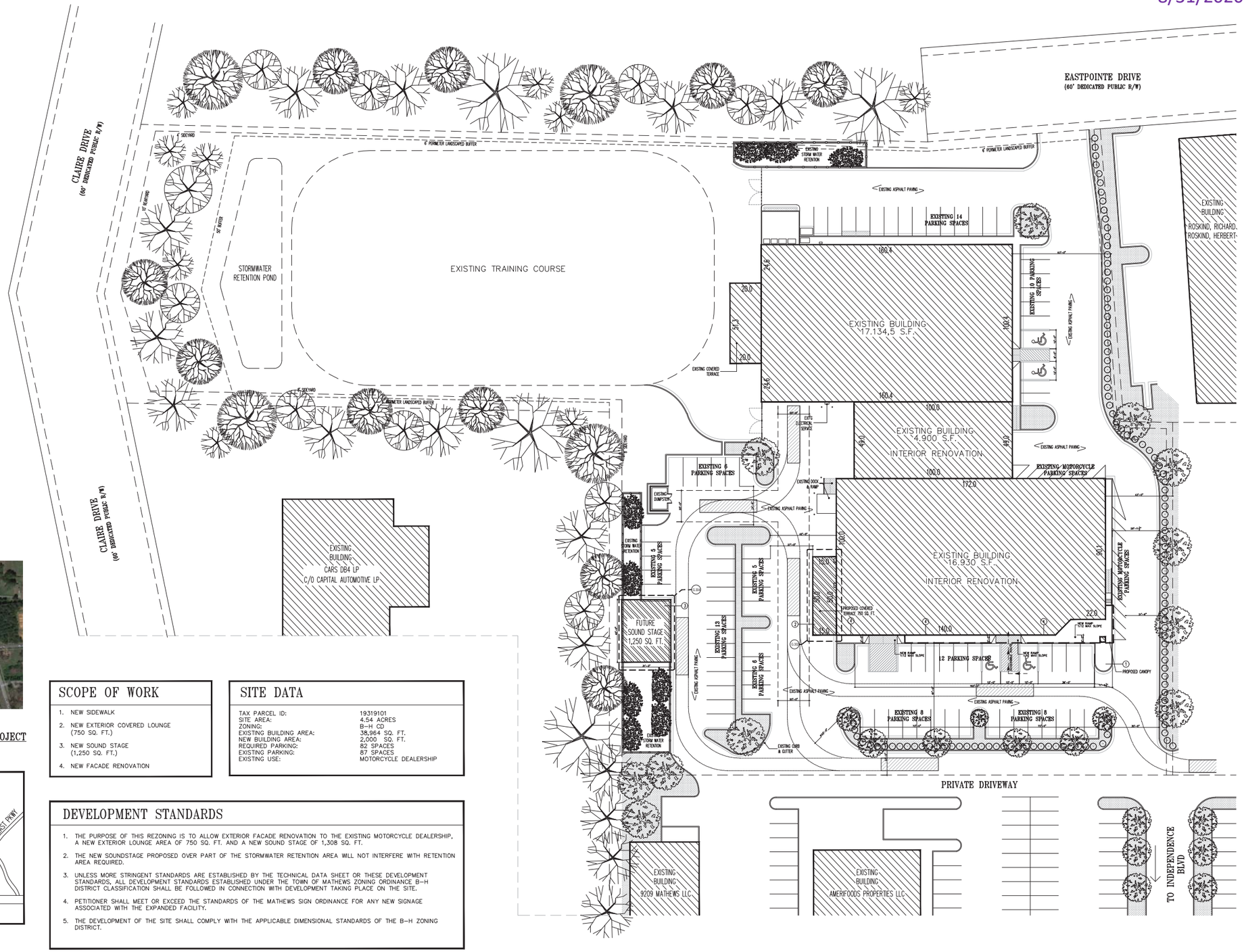


ARCHITECTURAL SITE PLAN
SCALE: 1"=20'-0"

AERIAL VIEW

THIS PROJECT

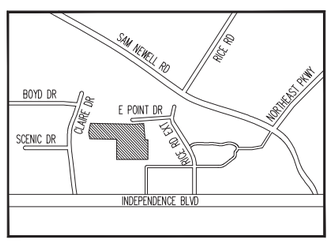


VICINITY MAP

## SCOPE OF WORK

1. NEW SIDEWALK
2. NEW EXTERIOR COVERED LOUNGE (750 SQ. FT.)
3. NEW SOUND STAGE (1,250 SQ. FT.)
4. NEW FACADE RENOVATION

## SITE DATA

| | |
|---|---|
| TAX PARCEL ID: | 19319101 |
| SITE AREA: | 4.54 ACRES |
| ZONING: | B-H CD |
| EXISTING BUILDING AREA: | 38,964 SQ. FT. |
| NEW BUILDING AREA: | 2,000 SQ. FT. |
| REQUIRED PARKING: | 82 SPACES |
| EXISTING PARKING: | 87 SPACES |
| EXISTING USE: | MOTORCYCLE DEALERSHIP |

## DEVELOPMENT STANDARDS

1. THE PURPOSE OF THIS REZONING IS TO ALLOW EXTERIOR FACADE RENOVATION TO THE EXISTING MOTORCYCLE DEALERSHIP, A NEW EXTERIOR LOUNGE AREA OF 750 SQ. FT. AND A NEW SOUND STAGE OF 1,308 SQ. FT.
2. THE NEW SOUNDSTAGE PROPOSED OVER PART OF THE STORMWATER RETENTION AREA WILL NOT INTERFERE WITH RETENTION AREA REQUIRED.
3. UNLESS MORE STRINGENT STANDARDS ARE ESTABLISHED BY THE TECHNICAL DATA SHEET OR THESE DEVELOPMENT STANDARDS, ALL DEVELOPMENT STANDARDS ESTABLISHED UNDER THE TOWN OF MATHEWS ZONING ORDINANCE B-H DISTRICT CLASSIFICATION SHALL BE FOLLOWED IN CONNECTION WITH DEVELOPMENT TAKING PLACE ON THE SITE.
4. PETITIONER SHALL MEET OR EXCEED THE STANDARDS OF THE MATHEWS SIGN ORDINANCE FOR ANY NEW SIGNAGE ASSOCIATED WITH THE EXPANDED FACILITY.
5. THE DEVELOPMENT OF THE SITE SHALL COMPLY WITH THE APPLICABLE DIMENSIONAL STANDARDS OF THE B-H ZONING DISTRICT.

CODE IN EFFECT: 2018 NCBC


fresh. ARCHITECTURE
1803 BANKS RD
MARGATE, FL, 33063
Tel. 754 804-9077
Tel. 561 213-7611
E-mail: oscar@fresh.international
www.freshdesigninternational.com


Architect

NOT VALID UNLESS IT BEARS AN ORIGINAL SIGNATURE AND A RAISED EMBOSSED SEAL

REGISTERED ARCHITECT OSCAR J. CABEZA 14074 STATE OF NORTH CAROLINA

OSCAR CABEZA
ARCHITECT
No. ARC00405768


ARCHITECT OF RECORD HEREBY EXPRESSLY RESERVES HIS COMMON LAW COPYRIGHT AND OTHER PROPERTY RIGHTS IN THESE PLANS. THE DESIGN AND DRAWINGS ARE NEITHER TO BE REPRODUCED, COPIED NOR CHANGED IN ANY FORM OR MANNER WHAT SO EVER NOR ASSIGNED TO ANY PARTY WITHOUT FIRST OBTAINING THE EXPRESS WRITTEN PERMISSION AND CONSENT OF FRESH ARCHITECTURE.


CLIENT

INDEPENDENCE HARLEY-DAVIDSON CHARLOTTE, NC

HARLEY DAVIDSON
9205 E. INDEPENDENCE BLVD,
MATHEWS, NC, 28105

CONSULTING ENGINEER

PROJECT NUMBER
19 - 1711

ISSUES

| DATE | |
|---|---|
| 08.28.20 | REZONING APP |

CONTENT

REZONING SITE PLAN

G.300

CURRENT 2020-718
8/31/2020

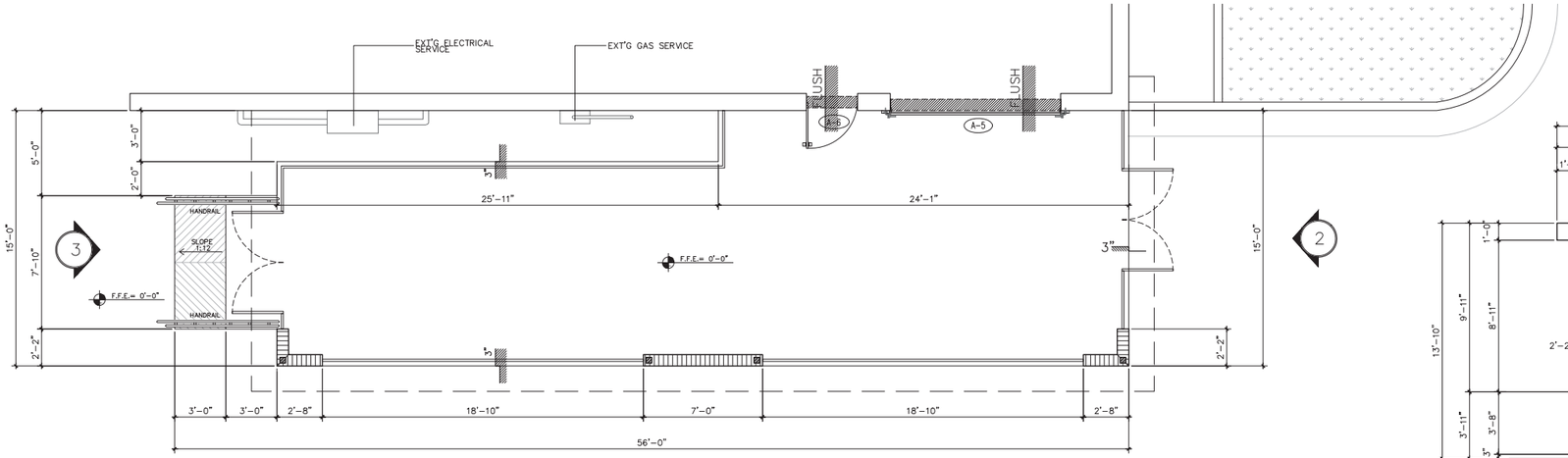


EXTERIOR LOUNGE FLOOR PLAN
SCALE: 1/4"= 1'-0"

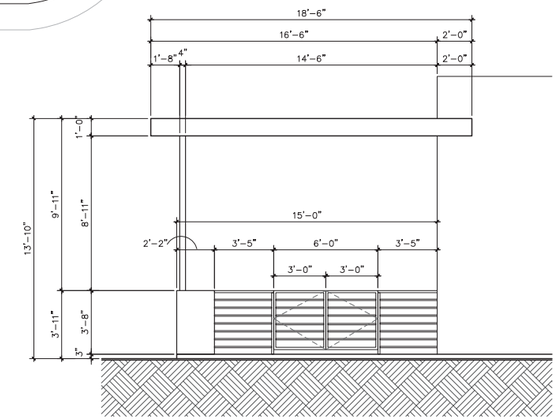


ELEVATION 2
SCALE: 1/4"= 1'-0"

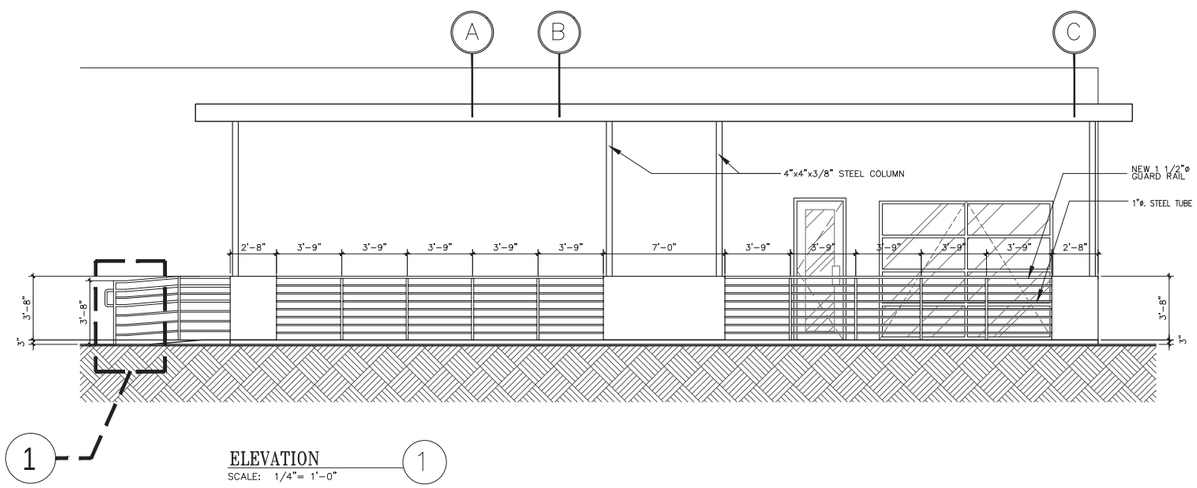


ELEVATION 1
SCALE: 1/4"= 1'-0"

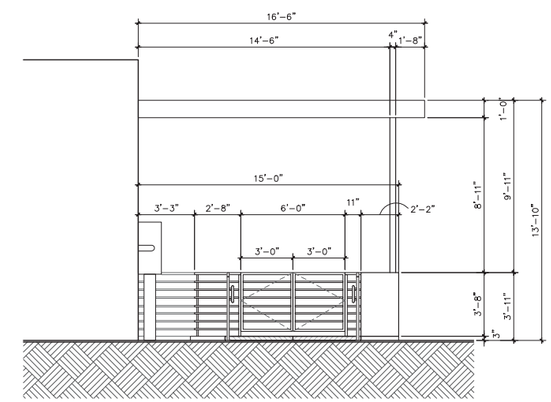


ELEVATION 3
SCALE: 1/4"= 1'-0"

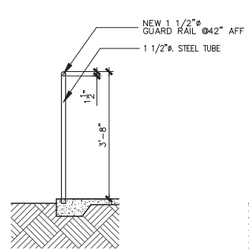


RAILING SECT. A
SCALE: 1/2"= 1'-0"

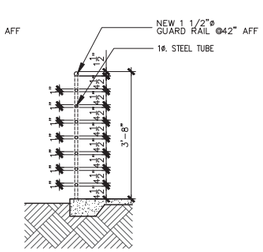


RAILING SECT. B
SCALE: 1/2"= 1'-0"

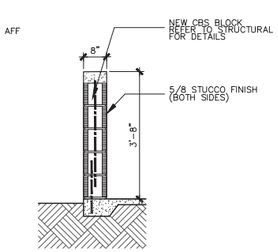


RAILING SECT. C
SCALE: 1/2"= 1'-0"

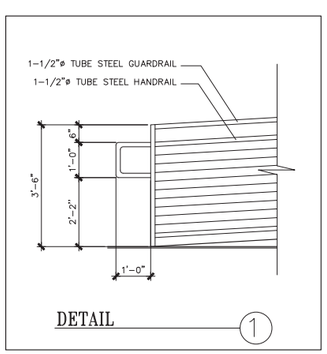


DETAIL 1

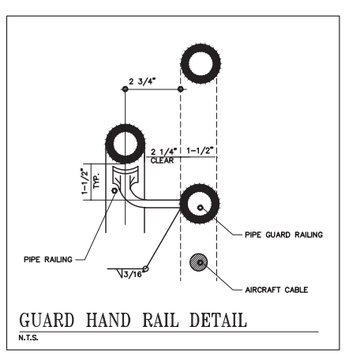


GUARD HAND RAIL DETAIL
N.T.S.

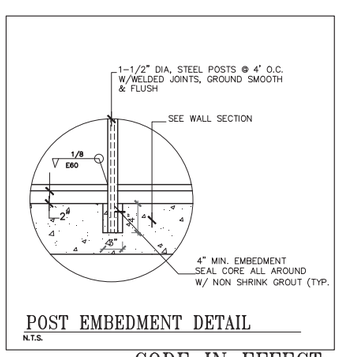


POST EMBEDMENT DETAIL
N.T.S.

CODE IN EFFECT: 2018 NCBC


fresh. ARCHITECTURE

1803 BANKS RD
MARGATE, FL, 33063
Tel. 754 804-9077
Tel. 561 213-7611
E-mail: oscar@fresh.international
www.freshdesigninternational.com


Architect

NOT VALID UNLESS IT BEARS AN ORIGINAL SIGNATURE AND A RAISED EMBOSSED SEAL

REGISTERED ARCHITECT OSCAR J. CABEZA 14074 STATE OF NORTH CAROLINA

OSCAR CABEZA
ARCHITECT
No. ARC00405768


ARCHITECT OF RECORD HEREBY EXPRESSLY RESERVES HIS COMMON LAW COPYRIGHT AND OTHER PROPERTY RIGHTS IN THESE PLANS. THE DESIGN AND DRAWINGS ARE NEITHER TO BE REPRODUCED, COPIED NOR CHANGED IN ANY FORM OR MANNER WHAT SO EVER NOR ASSIGNED TO ANY PARTY WITHOUT FIRST OBTAINING THE EXPRESS WRITTEN PERMISSION AND CONSENT OF FRESH ARCHITECTURE.


CLIENT

INDEPENDENCE HARLEY-DAVIDSON CHARLOTTE, NC

HARLEY DAVIDSON
9205 E. INDEPENDENCE BLVD,
MATHEWS, NC, 28105

CONSULTING ENGINEER

PROJECT NUMBER
19 - 1711

ISSUES

| DATE | |
|---|---|
| 08.28.20 | REZONING APP |

CONTENT

ARCHITECTURAL DETAILS

G.302

CURRENT 2020-718 8/31/2020

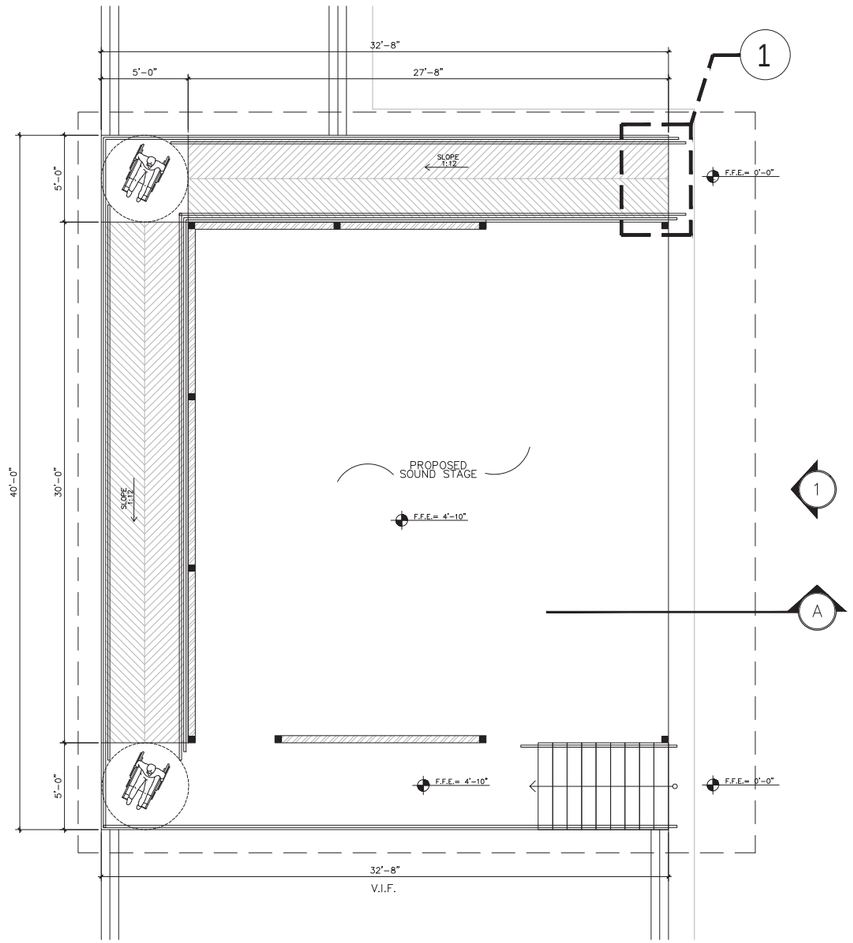


SOUND STAGE FLOOR PLAN
SCALE: 1/4"= 1'-0"

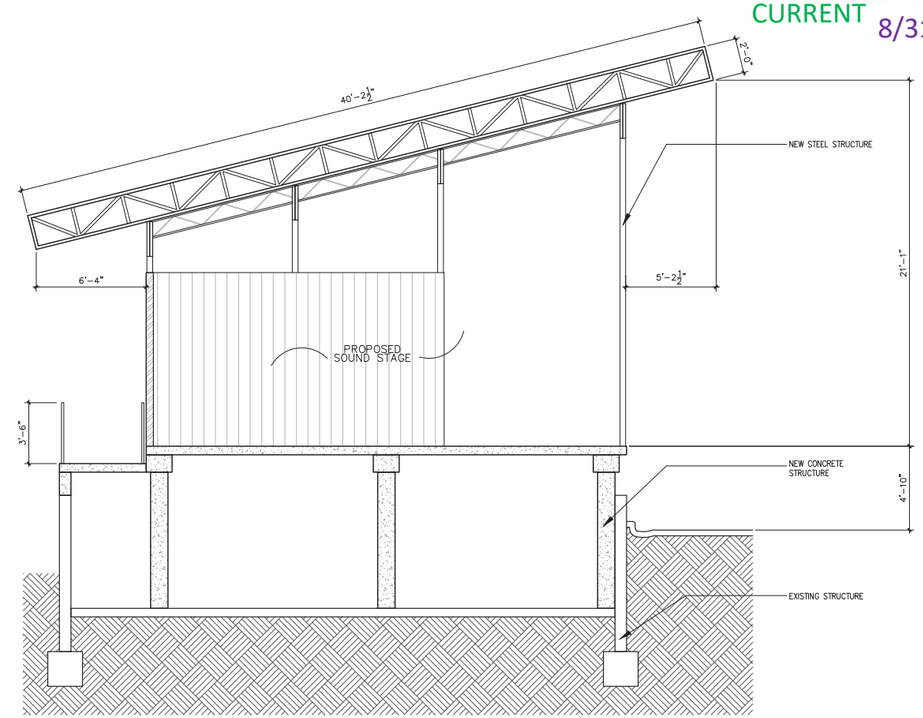


SOUND STAGE SECTION (A)
SCALE: 1/4"= 1'-0"

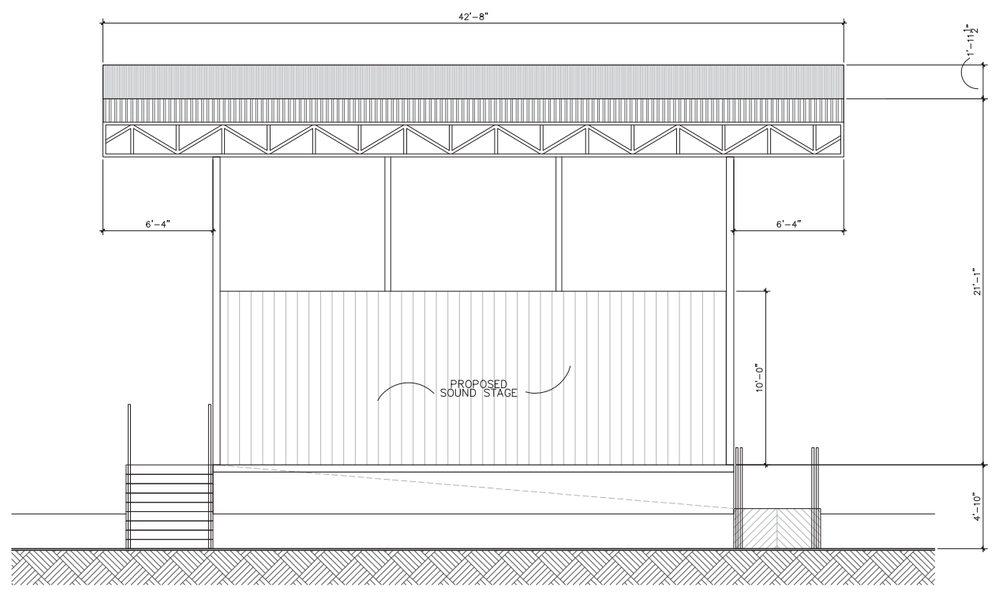


SOUND STAGE ELEVATION (1)
SCALE: 1/4"= 1'-0"

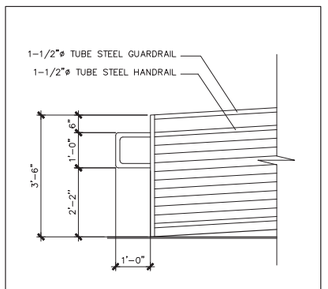


DETAIL (1)

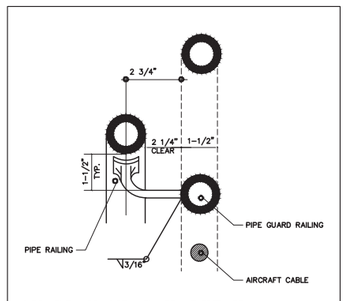


GUARD HAND RAIL DETAIL
N.T.S.

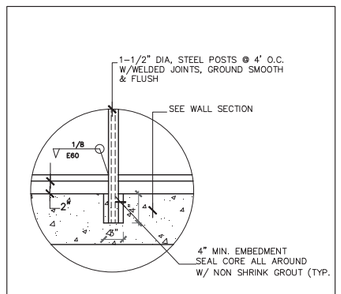


POST EMBEDMENT DETAIL
N.T.S.

CODE IN EFFECT: 2018 NCBC


fresh. ARCHITECTURE

1803 BANKS RD
MARGATE, FL, 33063
Tel. 754 804-9077
Tel. 561 213-7611
E-mail: oscar@fresh.international
www.freshdesigninternational.com


Architect

NOT VALID UNLESS IT BEARS AN ORIGINAL SIGNATURE AND A RAISED EMBOSSED SEAL

REGISTERED ARCHITECT OSCAR J. CABEZA 14074 STATE OF NORTH CAROLINA

OSCAR CABEZA
ARCHITECT
No. ARC00405768


ARCHITECT OF RECORD HEREBY EXPRESSLY RESERVES HIS COMMON LAW COPYRIGHT AND OTHER PROPERTY RIGHTS IN THESE PLANS. THE DESIGN AND DRAWINGS ARE NEITHER TO BE REPRODUCED, COPIED NOR CHANGED IN ANY FORM OR MANNER WHAT SO EVER NOR ASSIGNED TO ANY PARTY WITHOUT FIRST OBTAINING THE EXPRESS WRITTEN PERMISSION AND CONSENT OF FRESH ARCHITECTURE.


CLIENT

INDEPENDENCE HARLEY-DAVIDSON CHARLOTTE, NC

HARLEY DAVIDSON
9205 E. INDEPENDENCE BLVD,
MATHEWS, NC, 28105

CONSULTING ENGINEER

PROJECT NUMBER
19 - 1711

ISSUES

| DATE | |
|---|---|
| 08.28.20 | REZONING APP |

CONTENT

SOUND STAGE DETAILS

G.304

CURRENT 2020-718
8/31/2020

EXTERIOR RENDER

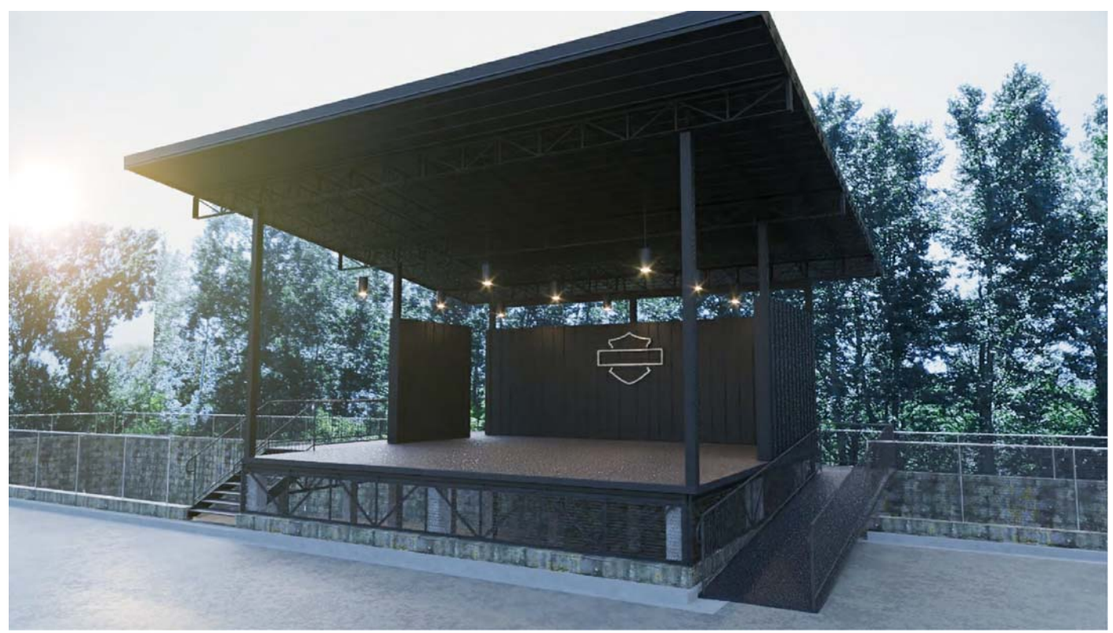

EXTERIOR RENDER

CODE IN EFFECT: 2018 NCBC


fresh.
ARCHITECTURE

1803 BANKS RD
MARGATE, FL, 33063
Tel. 754 804-9077
Tel. 561 213-7611
E-mail: oscar@fresh.international
www.freshdesigninternational.com


Architect

NOT VALID UNLESS IT BEARS AN ORIGINAL SIGNATURE AND A RAISED EMBOSSED SEAL

REGISTERED ARCHITECT
OSCAR J. CABEZA
14074
STATE OF NORTH CAROLINA

OSCAR CABEZA
ARCHITECT
No. ARC00405768


ARCHITECT OF RECORD HEREBY EXPRESSLY RESERVES HIS COMMON LAW COPYRIGHT AND OTHER PROPERTY RIGHTS IN THESE PLANS. THE DESIGN AND DRAWINGS ARE NEITHER TO BE REPRODUCED, COPIED NOR CHANGED IN ANY FORM OR MANNER WHAT SO EVER NOR ASSIGNED TO ANY PARTY WITHOUT FIRST OBTAINING THE EXPRESS WRITTEN PERMISSION AND CONSENT OF FRESH ARCHITECTURE.


CLIENT

INDEPENDENCE
HARLEY-DAVIDSON
CHARLOTTE, NC

**HARLEY DAVIDSON**
**9205 E. INDEPENDENCE BLVD,**
**MATHEWS, NC, 28105**

CONSULTING ENGINEER

PROJECT NUMBER
19 - 1711

ISSUES

| DATE | |
|---|---|
| 08.28.20 | REZONING APP |

CONTENT

SOUND STAGE DETAILS

G.305

CURRENT 2020-718
8/31/2020

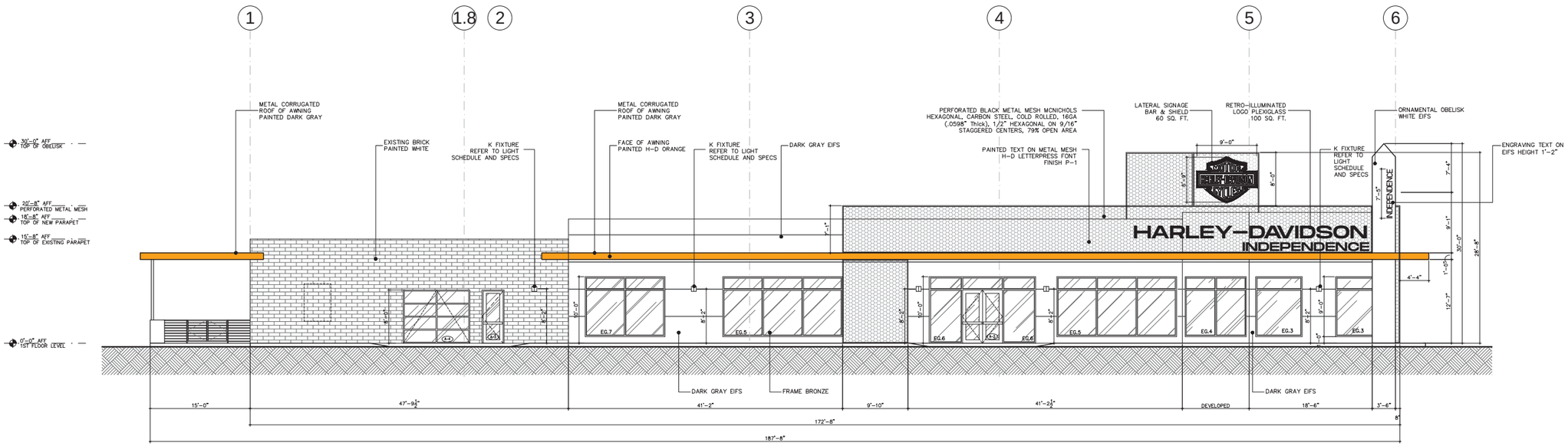


PROPOSED SOUTH ELEVATION (1)
SCALE: 1/8" = 1'-0"

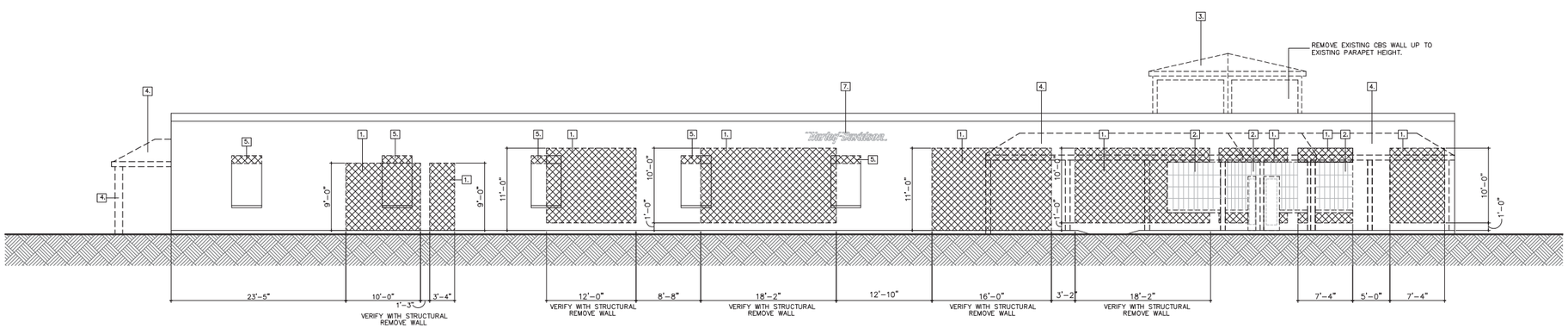


EXISTING/DEMOLITION SOUTH ELEVATION (1)
SCALE: 1/8" = 1'-0"

## SCOPE OF DEMOLITION

1. REMOVE EXTERIOR BRICK WALLS
2. REMOVE EXTERIOR DOORS & WINDOWS
3. REMOVE EXTERIOR ROOF STRUCTURE
4. REMOVE EXTERIOR WOODDEN STRUCTURE
5. REMOVE BRICK LINTEL
6.
7. REMOVE EXTERIOR SIGNS
8. REMOVE BOLLARDS

## DEMOLITION LEGEND

XXXXXXXX EXISTING BRICK WALLS TO BE REMOVED.

CODE IN EFFECT: 2018 NCBC


fresh. ARCHITECTURE

1803 BANKS RD
MARGATE, FL, 33063
Tel. 754 804-9077
Tel. 561 213-7611
E-mail: oscar@fresh.international
www.freshdesigninternational.com


Architect

NOT VALID UNLESS IT BEARS AN ORIGINAL SIGNATURE AND A RAISED EMBOSSED SEAL

REGISTERED ARCHITECT OSCAR J. CABEZA 14074 STATE OF NORTH CAROLINA

OSCAR CABEZA
ARCHITECT
No. ARC00405768


ARCHITECT OF RECORD HEREBY EXPRESSLY RESERVES HIS COMMON LAW COPYRIGHT AND OTHER PROPERTY RIGHTS IN THESE PLANS. THE DESIGN AND DRAWINGS ARE NEITHER TO BE REPRODUCED, COPIED NOR CHANGED IN ANY FORM OR MANNER WHAT SO EVER NOR ASSIGNED TO ANY PARTY WITHOUT FIRST OBTAINING THE EXPRESS WRITTEN PERMISSION AND CONSENT OF FRESH ARCHITECTURE.


CLIENT

INDEPENDENCE HARLEY-DAVIDSON CHARLOTTE, NC

**HARLEY DAVIDSON**
**9205 E. INDEPENDENCE BLVD,**
**MATHEWS, NC, 28105**

CONSULTING ENGINEER

PROJECT NUMBER
19 - 1711

ISSUES

| DATE | |
|---|---|
| 08.28.20 | REZONING APP |

CONTENT

EXTERIOR ELEVATIONS

A.410

CURRENT 2020-718
8/31/2020

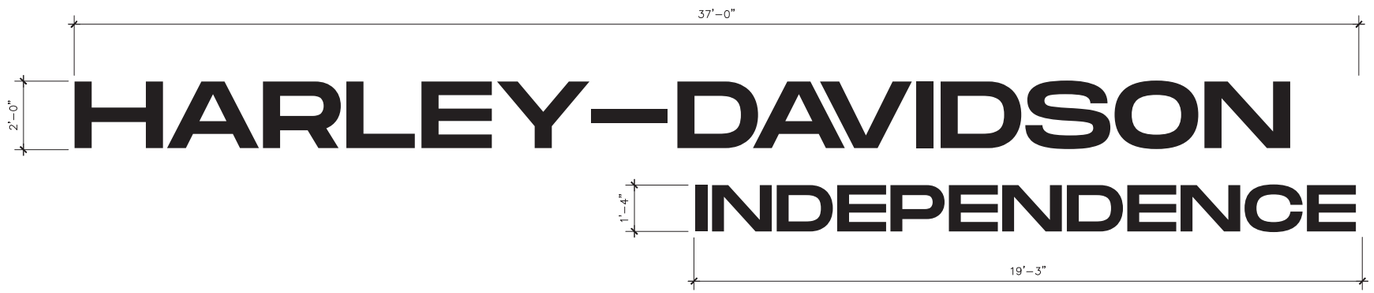


RETRO-ILLUMINATED LOGO PLEXIGLASS
DEPTH 3"
SIGN 1
AREA: 100 SQ. FT.
QUANTITY: 1

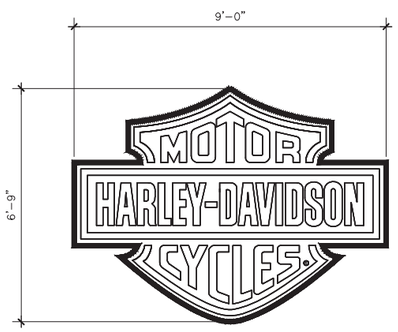


LATERAL SIGNAGE
BAR & SHIELD
SIGN 2
AREA: 60 SQ. FT.
QUANTITY: 1

| SIGN SCHEDULE | | | |
|---|---|---|---|
| SIGN | AREA (SQ.FT) | QUANTITY | TOTAL AREA |
| SIGN 1 | 100 | 1 | 100 |
| SIGN 2 | 70 | 1 | 60 |
| | | TOTAL | 160 |

CODE IN EFFECT: 2018 NCBC


fresh. ARCHITECTURE

1803 BANKS RD
MARGATE, FL, 33063
Tel. 754 804-9077
Tel. 561 213-7611
E-mail: oscar@fresh.international
www.freshdesigninternational.com


Architect

NOT VALID UNLESS IT BEARS AN ORIGINAL SIGNATURE AND A RAISED EMBOSSED SEAL

REGISTERED ARCHITECT OSCAR J. CABEZA 14074 STATE OF NORTH CAROLINA

OSCAR CABEZA
ARCHITECT
No. ARC00405768


ARCHITECT OF RECORD HEREBY EXPRESSLY RESERVES HIS COMMON LAW COPYRIGHT AND OTHER PROPERTY RIGHTS IN THESE PLANS. THE DESIGN AND DRAWINGS ARE NEITHER TO BE REPRODUCED, COPIED NOR CHANGED IN ANY FORM OR MANNER WHAT SO EVER NOR ASSIGNED TO ANY PARTY WITHOUT FIRST OBTAINING THE EXPRESS WRITTEN PERMISSION AND CONSENT OF FRESH ARCHITECTURE.


CLIENT

INDEPENDENCE HARLEY-DAVIDSON CHARLOTTE, NC

HARLEY DAVIDSON
9205 E. INDEPENDENCE BLVD,
MATHEWS, NC, 28105

CONSULTING ENGINEER

PROJECT NUMBER
19 - 1711

ISSUES

| DATE | |
|---|---|
| 08.28.20 | REZONING APP |

CONTENT

SIGN DETAILS

A.600