Matthews Transportation Advisory Committee
Regular Meeting Agenda
Thursday, February 17, 2022

The regular meeting of the Matthews Transportation Advisory Committee will be conducted remotely using the Zoom virtual meeting platform.

TO WATCH LIVE: The meeting will be available via Zoom. To join from a PC, Mac, iPad, iPhone or Android device, click this URL:
https://zoom.us/j/96625741951?pwd=amVOWkpSbG9SU0ZwRXN3UDJUN0FiQT09
Meeting ID: 966 2574 1951 Password: 522877 (An account is not necessary to join.)

TO LISTEN LIVE: The meeting audio will be available by calling 888-788-0099 (Toll-free) or 877-853-5247 (Toll-free). Meeting ID: 966 2574 1951 Password: 522877

1. Call to order – Hough
2. Roll Call and Determination of Quorum – Byers
3. Approval of the Minutes from January 20, 2022 meeting (attached) – Hough
4. Public Comments - Hough
5. Announcements
    a. Staff Announcements – Habina-Woolard
    b. CTAG Updates - CTAG Liaison – Rhodes
6. Unfinished Business (No Unfinished Business to discuss)
7. New Business
    a. Rezonings – 2022-746
    b. Upcoming Board of Commissioners presentations
        - BOC Planning Conference 2/25-2/27
        - Traffic Calming Policy
8. Adjournment

Matthews Transportation Advisory Committee
Regular Meeting Minutes DRAFT
Thursday, January 20, 2022

1. Call to order – Stevens
2. Roll Call and Determination of Quorum – Hough
    a. TAC Members: Bill Stevens (chair), Vince Manno (vice-chair), George Sottilo, Robyn Byers, Lou Abernathy, Bryan Hall, Donald Rhodes, Chris Hough
    b. Town Staff: Susan Habina-Woolard PE, Town Engineer
    c. Guests: Allison Pence, Mary, Lynette Outen
3. Approval of the Minutes from November 18, 2021 meeting (attached) – Stevens
    a. Mr. Manno made a motion to approve the minutes from the November as drafted, Mr. Abernathy seconded. Unanimous approval.
4. Public Comments - Stevens
    a. Ms. Pence spoke in favor of Ames St. Speed Humps
5. Announcements
    a. Staff Announcements - Habina-Woolard
        - None
    b. CTAG Updates - Rhodes
        - Mr. Rhodes gave an update on CATs and CTAG activity.
6. Unfinished Business
    a. Traffic Calming Policy (drafts attached) - action
        - Draft policy was discussed and feedback provided by the TAC
        - Mr. Hough made a motion to accept the draft policy with the modifications discussed for consideration by the Board of Commissioners for approval. Mr. Hall seconded. Unanimous approval.
7. New Business
    a. S Ames St Speed Hump petition - action
        - Mr. Manno made a motion to reject the speed hump petition, Mr. Sottilo seconded. The motion passed with Mr. Hall and Mr. Hough in opposition.
    b. ENT district roadway network (map attached) - information
        - Reviewed and discussed proposed road network in ENT district.
    c. Rezonings - Habina-Woolard
        - 2021-742 & 2021-743 Matthews Medical TIA (https://www.matthewsnc.gov/docview.aspx?docid=33331)
        - 2021-744 NRP District at Matthews Lofts TIA (https://www.matthewsnc.gov/docview.aspx?docid=33337)

    - Micromobility (update 1/10/2022 https://www.matthewsnc.gov/files/documents/Micromobility11020221318025655010522PM.pdf)
    - Mr. Hough made a motion to support the recommended pedestrian and signal improvements made by staff engineering for Rezonings: 2021-742, 2021-743, and 2021-744. Mr. Abernathy seconded. Unanimous approval.
  d. Upcoming Board of Commissioners presentations - Habina-Woolard
    - Pedestrian Corridor initiative
  e. Officer elections - action
    - Mr. Abernathy made a motion to nominate Mr. Hough for the position of TAC chair. Mr. Stevens seconded. Unanimous approval.
    - Mr. Stevens made a motion to nominate Mr. Manno as Vice-Chair. Mr. Abernathy seconded. Unanimous approval.
    - Mr. Stevens made a motion to nominate Dr. Byers for the position of Secretary. Mr. Sottilo seconded. Unanimous approval.
8. Adjournment - 9:11pm

TOWN OF MATTHEWS
SPEED HUMP AND TRAFFIC CALMING POLICY
Adopted March 1998, amended August 1999, August 2000, July 2003, January 2022

It is the policy of the Town of Matthews to consider traffic calming measures on residential streets following a petition process. The Policy below is for Town-maintained streets.

For NCDOT-maintained streets, guidance can be found online here: https://connect.ncdot.gov/resources/safety/Teppl/Pages/Teppl-Topic-Original.aspx?Topic_List=T11

PETITION PROCESS AND PROCEDURES

Initial request to the Town for traffic calming is done in writing to the Town Engineer with an explanation of the need and a map of the location(s). Engineering staff will then collect speed and volume data as close to the requested location as possible, and in some cases, conduct observations. Collecting this data could take several months depending on the number of other pending requests.

If the speed and volume data exceed the minimums, engineering staff will develop up to three alternatives from the Traffic Calming Measures matrix to address the request. Staff will then meet with the requestor to discuss the data collected and the device/measure options. The request will be presented by staff as an agenda item on an upcoming Matthews Transportation Advisory Committee (TAC) meeting. It is strongly recommended that the requestor or a representative attend the TAC meeting where the request is scheduled for discussion. All TAC agendas are posted on the Town's website along with meeting date, time, and location information.

In some cases, the minimum speed and volume criteria are not met. The requestor has the opportunity to approach the TAC with a request to proceed, during the public comment period at one of its regularly-scheduled meetings. Should the TAC not agree to proceed, the requestor may approach the Matthews Board of Commissioners (BOC) at one of its regularly-scheduled meetings, during the public comment period.

During the TAC meeting discussion, the TAC reviews the data and options with staff and agrees on a path forward for the request. The requestor can then proceed with providing the supporting documentation. This includes the neighborhood petition as well as a statement of financial commitment from the neighborhood.

After receiving the petition and financial commitment statement, staff will verify the signatures of the petition and move forward with preliminary sketches and cost estimate. The final recommendation from engineering staff will be presented at a subsequent meeting of the TAC. Staff will present the recommendation along with TAC's concurrence or alternate recommendation to the BOC, along with the design sketch and cost quotes for construction/installation. The BOC may add, delete or modify the recommendations as it sees fit. Should recommended traffic calming measures exceed the money appropriated in the current fiscal year, petitions may be held over until the money can be appropriated.

DRAFT

Qualifying Criteria

- Street is on the Town-maintained street system.
- Current speed limit must be posted as 25 mph or under.
- Average Annual Daily Traffic (AADT) volumes should be greater than 500.
- Average speed exceeds 5 mph over the posted speed limit.
- Street should not be a primary emergency services route (e.g., main route to hospital); need written or verbal support from Matthews Police and Fire Departments.
- The street grade is less than or equal to 8%.
- Verification of the signatures contained in the petition.

Additional Street Criteria for Speed Cushions only

- Classified as a local residential street
- Width must be less than or equal to 40 feet
- Final locations of the speed cushions should follow these criteria:
    - At least 200 feet from an intersection
    - Place under street lighting for greater visibility
    - Locate on property lines
    - Locate 5-10 feet from driveways
    - At least 200 feet apart (average 600-800 feet apart)
    - Stopping sight distance is greater than or equal to 200 feet

Supporting Documentation

Requestor's responsibility:

- Create a map of the requested device/measure locations, with assistance from Town staff as needed, adhering to the placement criteria:
    - Place under street lighting for greater visibility
    - Locate on property lines
    - Locate 5-10 feet from driveways
    - At least 200 feet apart (average 600-800 feet apart)
    - Stopping sight distance is greater than or equal to 200 feet
- A neighborhood petition signed by 75% of all property owners within the affected area up to ¼-mile as determined by Town staff, which may include adjoining streets and cul-de-sacs. Only one property owner signature per parcel will be counted.
    - The map shall be attached to the petition.
    - If multiple locations are requested, additional signatures are needed to encompass the requirements for all locations.
- A letter of financial support from the neighborhood association is required, if applicable.

Additional Considerations

In addition to the previously listed criteria, the following technical conditions may also be considered by the TAC and/or BOC when considering traffic calming requests:

- Past crash history
- Past speeding citations
- Sight line and distance
- Curvature considerations

DRAFT

- Existing vegetation
- Existence of sidewalks
- Other objects near the street surface
- Cost of the device(s)

Cost Responsibility

A neighborhood requesting traffic calming measures shall be responsible for 20% of the cost of the requested device/measure(s). In some cases, especially where low-cost measures cannot be utilized due to street configuration, there may be other funding opportunities available. Due to the varying nature of traffic control measures and the ever-increasing cost of supplies and construction, implementation of the measure may be several months after the time of approval.

It is the Town's intention to install several traffic calming measures at the same time in order to obtain the most economical price to the Town. As such, qualified petitions will be presented to the TAC for recommendation as they are received, but then held until there is, in the opinion of the Town Engineer, a sufficient number to proceed with presentation to the BOC. The Town will attempt to install measures within three years of BOC approval.

Any neighborhood that wishes to advance the installation of a traffic calming measure may do so by engaging a private contractor willing to perform the work under the Town's standards and specifications, at the neighborhood's own cost.

Requests to Remove Traffic Calming Measure

The Town may remove traffic devices/measures at any time when it is in the best interest of the Town, with BOC action. Such removal will be at the expense of the Town. In cases where the Town received any payment for the installation of the device/measure(s), there shall be no refunds.

Residents may initiate a request for the removal of a traffic measure through a petition process meeting the same criteria for signatures as petition requesting one. Upon certification, the petition will be reviewed by the TAC and a recommendation made to the Board of Commissioners. If approved, such removal will be at the expense of the requesting party. Removal of device/measure will be done after the invoice for removal is paid. In cases where the Town received any payment for the installation of the device/measure(s), there shall be no refunds.

DRAFT

Summary of Traffic Calming Measures

Traffic Calming Measure	Typical Cost (2017)[1]	Average Daily Traffic	Functional Classification	Average Reduction in Speed	Average Reduction in Volume	Average Reduction in Crashes	Notes
Intersection Applications							
Corner Extension / Bulb-Out	$8,000–$12,000 (four corner extensions); drainage modifications can increase cost to $40,000.	Can be appropriate for all levels of traffic volume.	Intersection of local, collector, and arterial roads.	Likely to decrease slightly; depends on the volume / distribution of traffic. Shorter curb radii can slow turning vehicles.	Minimal	Minimal	Shortens pedestrian crossing distances. Installed only on closed-section roads (i.e. curb and gutter). Major utility relocation may be required (i.e. drainage features). Minimum turning radii = 30 feet inside, 42 feet outside
Mini Roundabout	$15,000–$60,000	One-lane roundabouts: total average daily traffic volumes <25,000 vpd	Intersection of two local roads or of a local and collector road. Approach legs must be one lane in each direction.	40%[3]; varies depending on deflection angles of the approach lanes.	Minimal	One-lane roundabouts: 74%	Center island and splitter islands are fully mountable: maximum height = 4 inches. Minimum inside radius = 30 feet. Minimum outside radius = 42 feet. Not typically used at intersections with high volume of left-turning trucks or buses.
Raised Intersection	$15,000–$60,000; may be higher depending on width of roads and drainage requirements.	Relatively low daily traffic volumes. (<4,000 vpd per intersection leg)[2]	Intersection of local or collector roads with existing or proposed crosswalks.	<10% reduction in mid-block speeds. 85th percentile traversing speeds = 25–35mph.	No data available	No data available	Storm drainage / underground utility modifications are likely necessary. Typically installed at intersections with high pedestrian crossing demand. Maximum speed limit = 35 mph.
Traffic Circle	$10,000–$25,000	One-lane roundabouts: total average daily traffic volumes <25,000 vpd	Intersection of two local roads. Approach legs must be one lane in each direction.	5–13 mph reduction within intersection limits. Less effective than mini roundabouts due to no splitter islands.	Wide range of outcomes; varies depending on available alternative routes.	One-lane roundabouts: 74%	Center island is raised and is **not** fully mountable. Left-turning trucks or buses usually are not able to circulate around center island. Intersection approaches do **not** have splitter islands.
Segment Applications							
Chicane	$8,000–$25,000; varies depending on any necessary modifications to curbing and drainage.	Relatively low daily traffic volumes with an even distribution of traffic. (<3,500 vpd)[2]	Local road or low-volume collector. Maximum two-lane cross-section.	15%–40%; varies depending on the length of the alignment shift, the volume/distribution of traffic, and pre-implementation speed.	Minimal	Minimal	Typical dimensions of a chicane: 6-8 feet in width, at least 20 feet in length. Minimum lane width = 12 feet. Most effective with equivalent traffic volumes on both approaches. Not a preferred location for a crosswalk.
Choker	$10,000–$25,000; varies depending on size of choker and drainage requirements.	Can be appropriate for all levels of traffic volume.	Local, collector, and arterial roads. Maximum two-lane cross-section.	Likely to decrease slightly; depends on the volume/distribution of traffic.	Minimal	Minimal	Typical dimensions of a choker: 6-8 feet in width, at least 20 feet in length. Minimum lane width = 10 feet. Most effective when motorists traveling in opposing directions encounter one-another within the narrowed area.

[1]Source: ITE Traffic Calming Measures and FHWA Traffic Calming ePrimer. Includes costs for design, materials, and construction; does not include right-of-way costs.
[2]Note: Maximum traffic volume thresholds based on ITE and FHWA Traffic Calming resources which references Pennsylvania and South Carolina applications.
[3]Source: FHWA publication – *Roundabouts: An Informational Guide.*

Summary of Traffic Calming Measures *(continued)*

Traffic Calming Measure	Typical Cost (2017)[1]	Average Daily Traffic	Functional Classification	Average Reduction in Speed	Average Reduction in Volume	Average Reduction in Crashes	Notes
Segment Applications							
Median Island	$15,000–$55,000; varies depending on length and width of median.	Can be appropriate for all levels of traffic volume.	Local, collector, and arterial roads. Two-way roads only.	2–3mph reduction at/near the median island.	Minimal	Minimal	Minimum lane width = 12 feet. Can be used as a pedestrian refuge island. May impact access to properties adjacent to median island. May require relocation of drainage features and utilities. May require removal of on-street parking.
On-Street Parking	<$6,000; could be higher depending on design specifications and length of application.	Can be appropriate for all levels of traffic volume.	Local, collector, and arterial roads as a midblock measure or near an intersection.	2–3mph reduction at/near on-street parking areas.	Minimal	Minimal	Minimum roadway width between parked vehicles = 15 feet. Effectiveness is directly affected by parking demand. May limit visibility and sight distance at driveways or intersections.
Speed Cushion	Rubber: $3,000–$4,000 Asphalt: $2,500–$6,000	Relatively low daily traffic volumes (<3,500–4,000 vpd[2])	Local and collector roads.	20%–25%; varies depending on height and spacing of speed cushions.	20%	13%	Speed reduction for emergency vehicles with a wider wheelbase is minimal. Not appropriate on grades greater than 8%.
Speed Hump	$2,000–$4,000		Local road or residential collector.	20%–25%; varies depending on height and spacing of speed humps.	20%	13%	Not appropriate for a primary emergency vehicle route or bus transit route. Not appropriate on grades greater than 8%.
Speed Table	$2,500–$8,000		Local, collector, and arterial roads (in certain circumstances).	Speed reduction typically less when compared to speed humps. Typical traversing speed = 30mph.	20%	45%	

[1]Source: ITE Traffic Calming Measures and FHWA Traffic Calming ePrimer. Includes costs for design, materials, and construction; does not include right-of-way costs.
[2]Note: Maximum traffic volume thresholds based on ITE and FHWA Traffic Calming resources which references Pennsylvania and South Carolina applications.
[3]Source: FHWA publication – *Roundabouts: An Informational Guide.*

Traffic Calming Measure Illustrations

Corner Extension / Bulb-Out

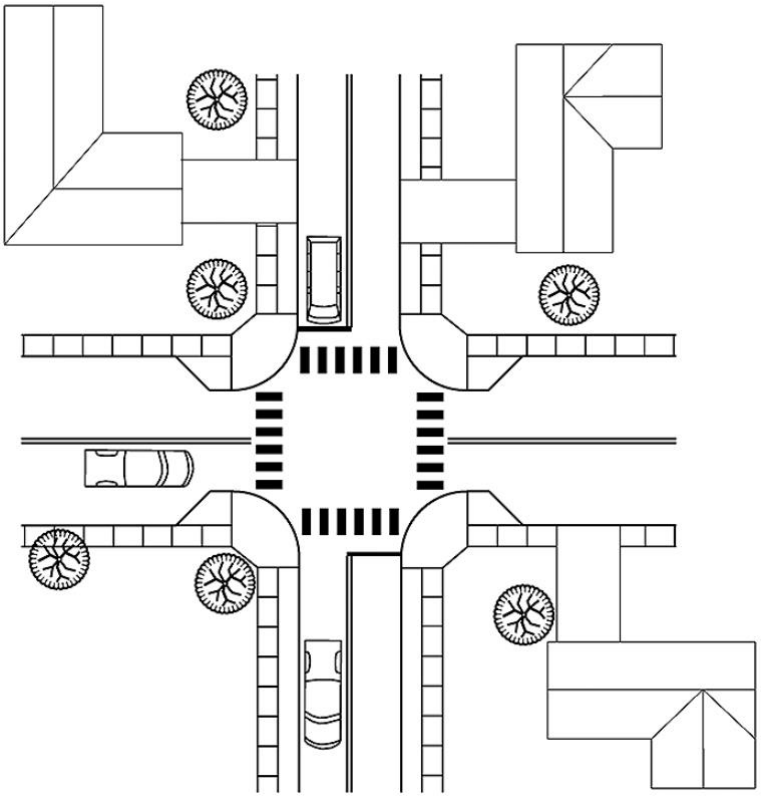

Mini Roundabout

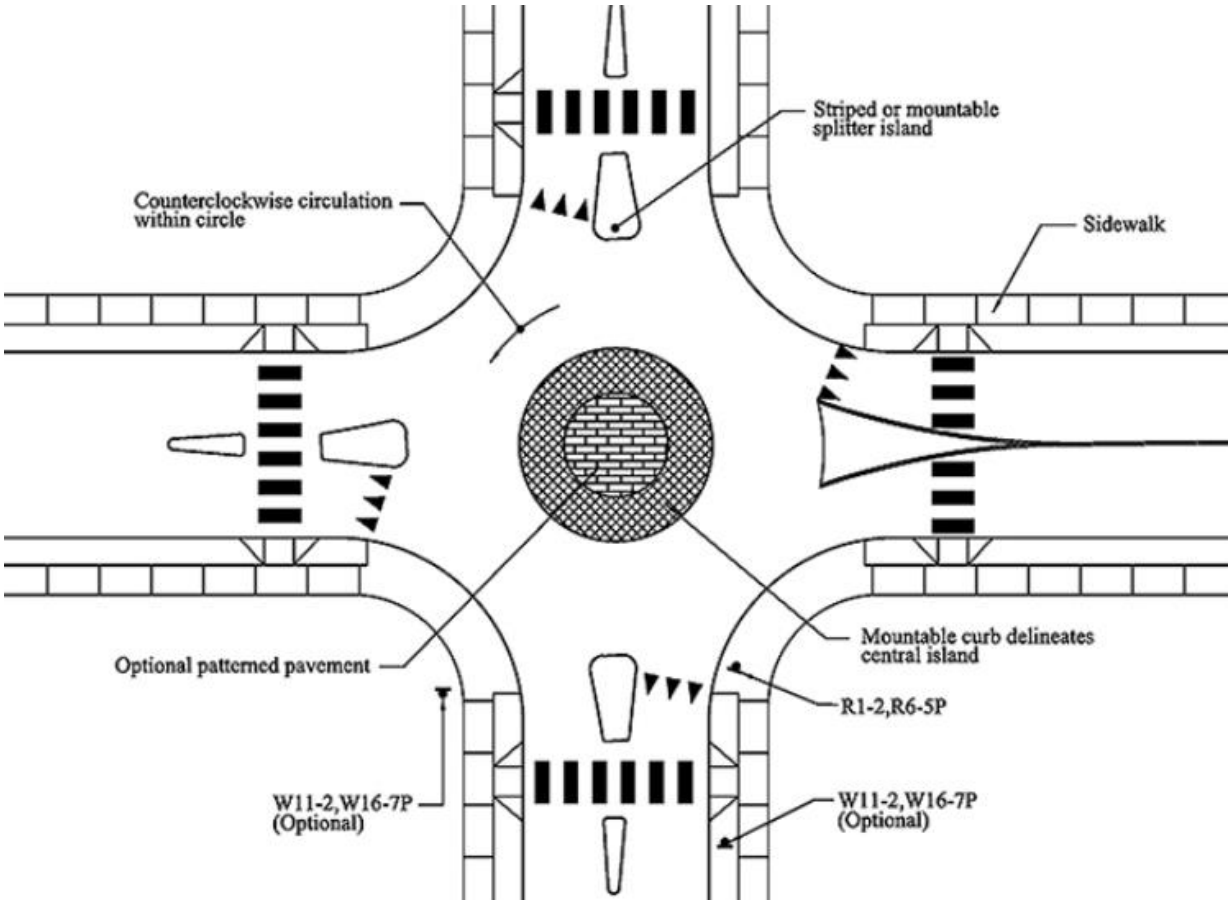

Raised Intersection

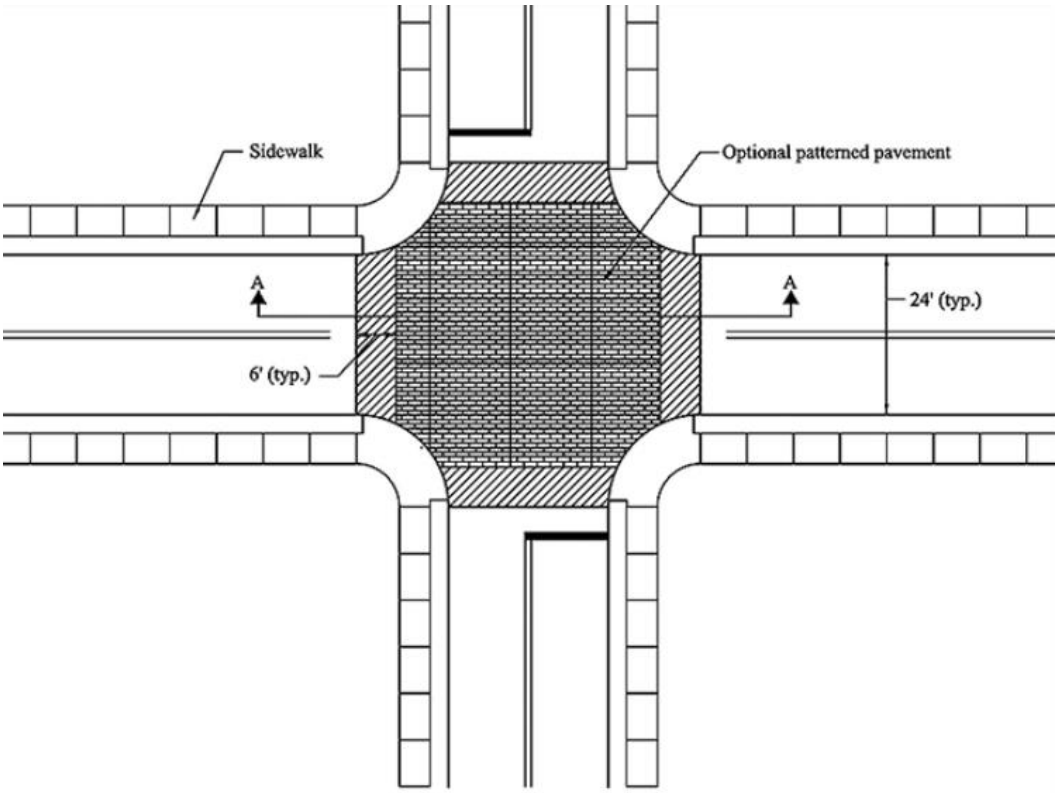

Traffic Circle

Chicane

Choker

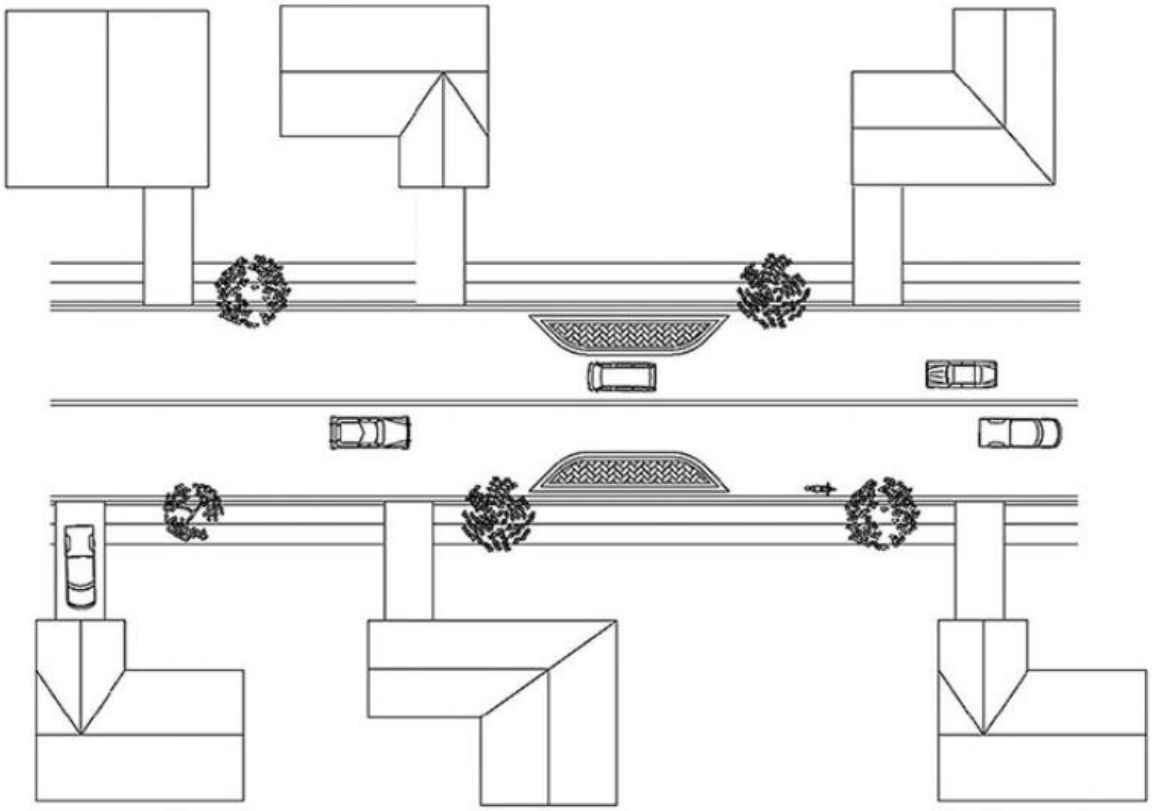

Median Island

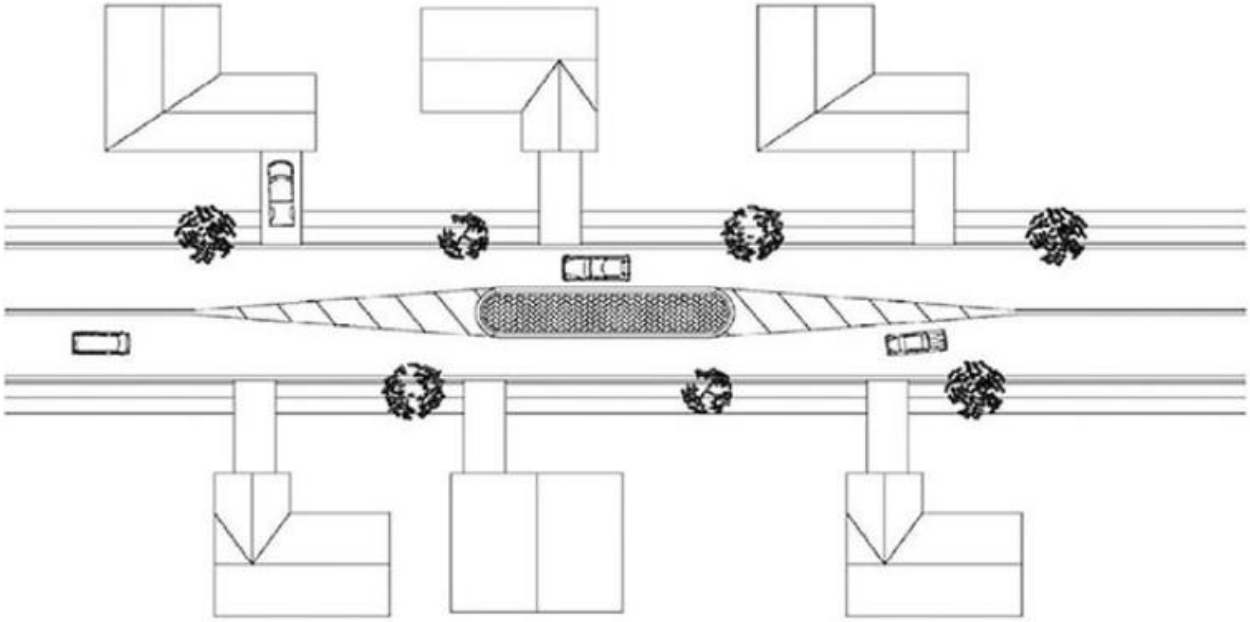

On-Street Parking

Speed Cushion

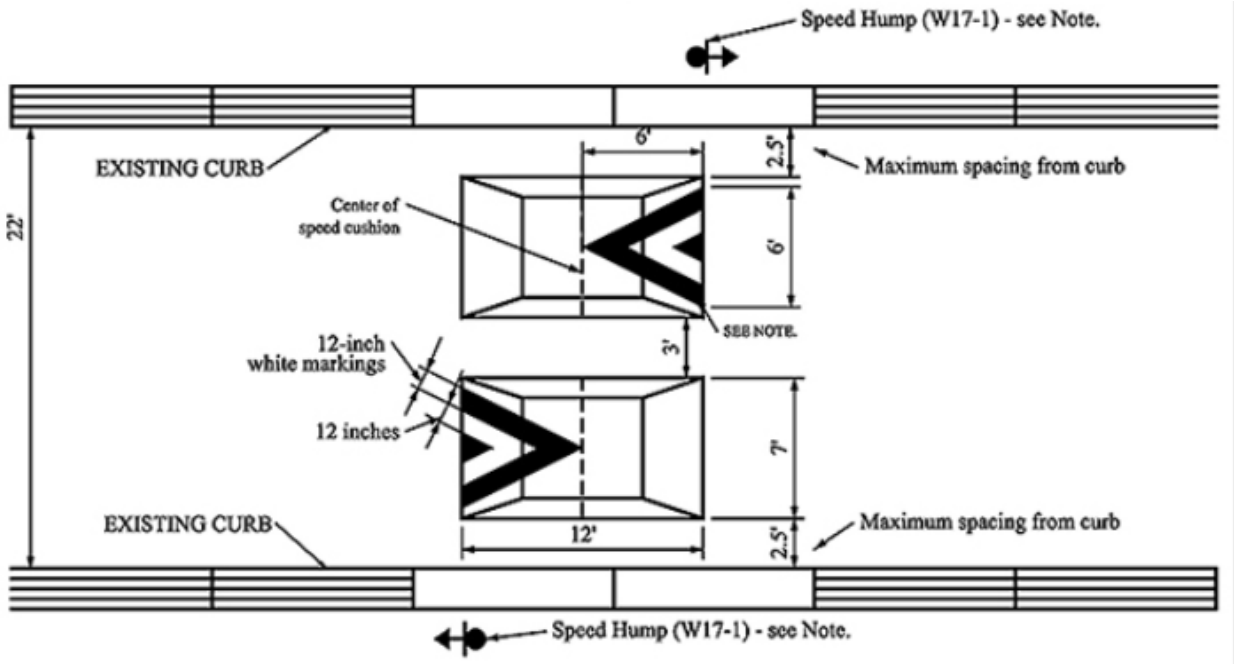

Speed Hump

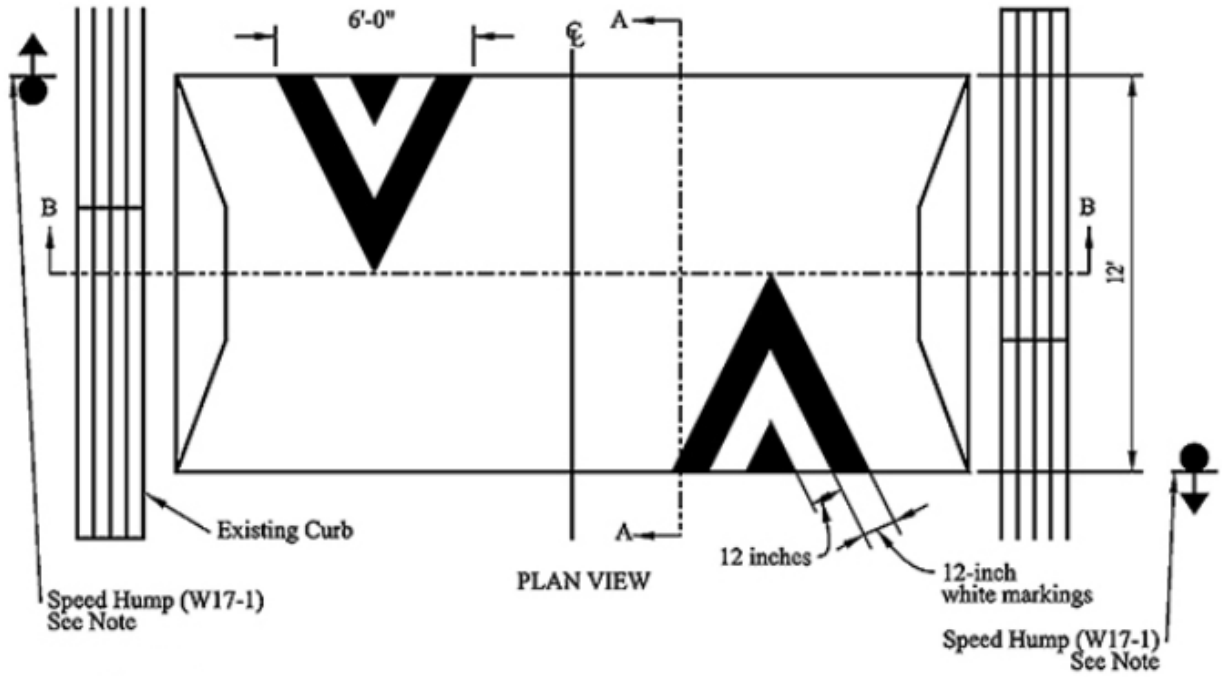
6'-0"
℄
A
B
B
12'
Existing Curb
A
12 inches
12-inch
white markings
PLAN VIEW
Speed Hump (W17-1)
See Note
Speed Hump (W17-1)
See Note

SPEED
HUMP

Speed Table

Neighborhood:
Date Received:

NEIGHBORHOOD PETITION

This is a petition form to request certain devices within a neighborhood or along a residential or commercial street. The lead petitioner is responsible for completing this form and the following requirements, and can reach out to the Town Engineer (704-708-1243) for assistance with maps if needed:

- ☐ Create a map of the requested device/measure locations, with assistance from Town staff as needed, adhering to the placement criteria:
  - Place under street lighting for greater visibility
  - Locate on property lines
  - Locate 5-10 feet from driveways
  - At least 200 feet apart (average 600-800 feet apart)
  - Stopping sight distance is greater than or equal to 200 feet
- ☐ A neighborhood petition signed by 75% of all property owners within the affected area up to ¼-mile as determined by Town staff, which may include adjoining streets and cul-de-sacs. Only one property owner signature per parcel will be counted.
  - The map shall be attached to the petition.
  - If multiple locations are requested, additional signatures are needed to encompass the requirements for all locations.
- ☐ A letter of financial support from the neighborhood association is required, if applicable.

NAME OF LEAD PETITIONER: _____

Lead Petitioner's home address: _____

Lead Petitioner's phone and email: _____

Submit signed petition and map to the Town Engineer, 1600 Tank Town Rd, Matthews NC 28105.

We, the undersigned neighbors of _____ neighborhood, request the Town of Matthews to install:

- ☐ Traffic calming devices
- ☐ Stop signs
- ☐ Street lights
- ☐ Sidewalks
- ☐ Other: _____

on the following street(s) in our neighborhood:

_____

- **We understand** that there may be a cost to the neighborhood for the proposed device.
- **We understand** that each device installed may be accompanied by additional signage.
- **We understand** that portions of the street may be closed during installation.
- **We understand** that emergency services response time will be marginally impacted.

NEIGHBORHOOD SIGNATURES (one property owner's signature)

PRINTED NAME & SIGNATURE	STREET ADDRESS

(continued on additional sheets)

Neighborhood:
Date Received:

Continued, page _____ of _____

PRINTED NAME & SIGNATURE STREET ADDRESS

Revised by SHW 01/22/2022